MODEL TRC500

(Energy Recovery Ventilators (ERV))

P: 800.961.7370
www.solerpalau-usa.com

AHRI CERTIFIED™

c UL us
LISTED
DUCTED HEAT
RECOVERY VENTILATOR
89S5

Specifications

Ventilation Type: Static Plate, Heat and Humidity Transfer					
Typical Airflow Range: 200-540 CFM					
AHRI 1060 Certified Core: One L85					
Airflow Rating Points (for AHRI): 450 CFM and 338 CFM					
Motors: One, 0.6 hp (Single Phase)					
V	**Hz**	**Phase**	**FLA**	**Min. Cir. Amps**	**Max. Overcurrent Protection Device**
115	60	Single	7.0	8.8	15
208-230	60	Single	3.5	4.4	15
Standard Features: Non-Fused Disconnect 24 VAC Transformer/Relay Package					
Filters: Two total, MERV 8, 2” pleated, 14” x 20” nominal size					
Weight: 141 lbs (unit), 160 lbs (in carton) 200 lbs (on pallet), up to 3 units on 40 lb pallet					
Shipping Dimensions: 48” L x 41” W x 18” H (in carton) 55” L x 42” W x 22” H (on pallet)					

Core Performance

Airflow CFM	ESP in H_2O	Watts	Temp EFF%	Total EFF% Winter/Summer*
225	1.25	335	81	76/66
338	1.00	420	77	71/61
380	0.90	470	75	69/59
450	0.65	550	73	66/56
540	0.25	640	70	62/52
575	0.00	690	69	61/51
600	-0.25	735	68	60/50

*At AHRI 1060 standard conditions
(Contact Factory for certified data for core components.)
Note: Watts is for the entire unit.

EA: Exhaust Air to outdoors
OA: Outdoor Air intake
RA: Room Air to be exhausted
FA: Fresh Air to inside

Dimensions

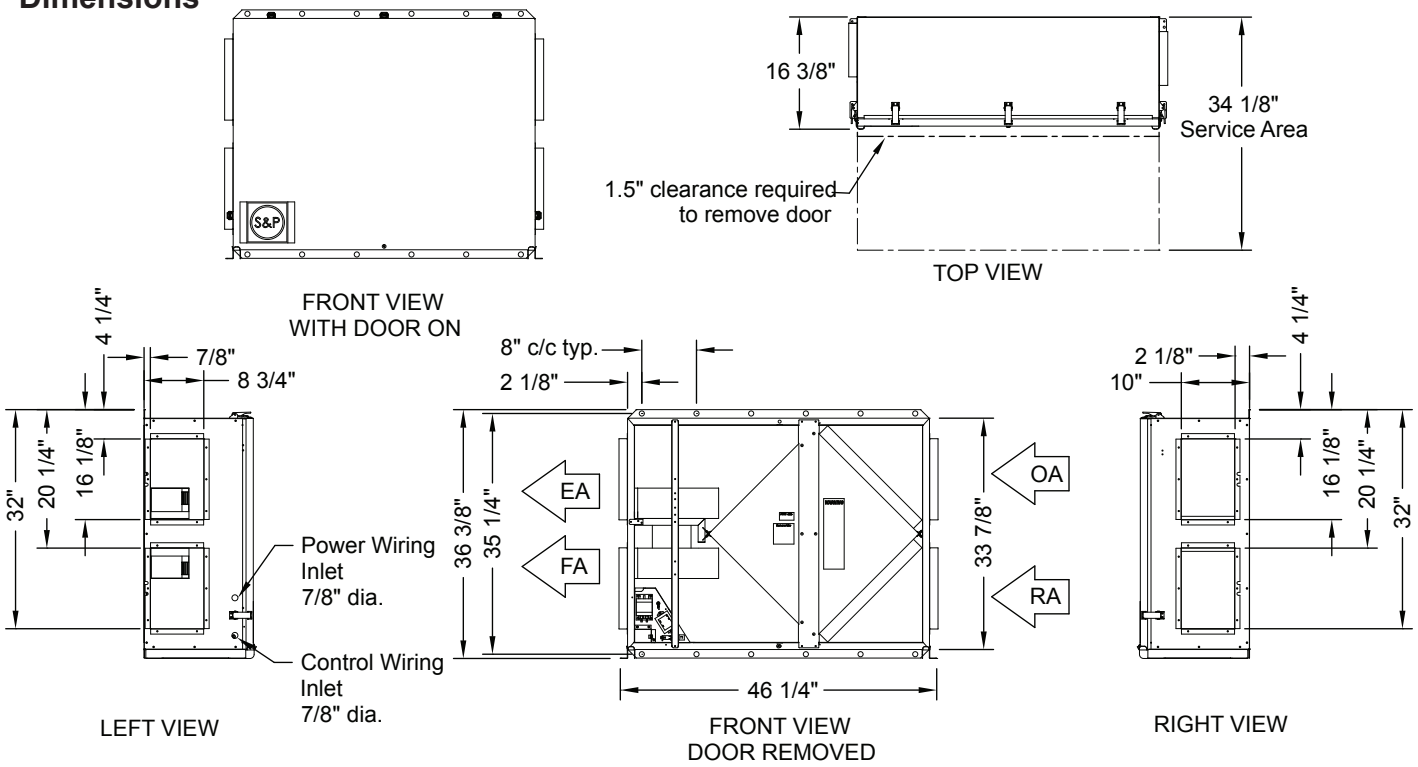

For more information contact us at www.solerpalau-usa.com or 1.800.961.7370 for additional submittal drawings.
Soler & Palau will not be responsible for fabrication changes or errors resulting from customer use of a non-current submittal drawing.

Soler&Palau Ventilation Group